# TeeTube

## Range: Weatherproof/Waterproof Connectors

**Order Code: THB.399.C4A**

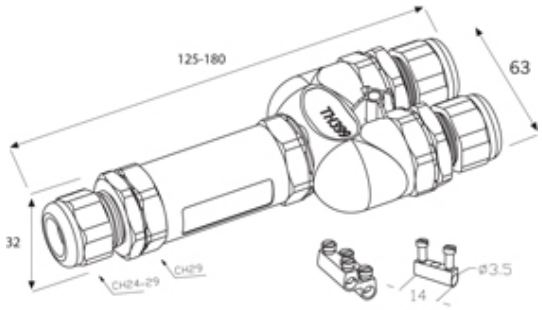


### DESCRIPTION

TeeTube 4 Pole Screw - end barrier contact 7mm to 13.5mm on one gland 8mm to 17mm on the other 2 glands, 4 mm max conducter size IP68 32A 250V 3 cable entries

### WEATHERPROOF/WATERPROOF CONNECTORS FEATURES

- Tough, robust construction with large cable range acceptance
- Straight through, T splitter and Y splitter versions available
- Dual terminal versions available for easy fitting and looping of conductors (2+2 and 3+3 poles)
- Temperature rating of -40°C to +125°C

*Features may vary by product throughout the range.*

*Subject to technical modification without notice.*
*Typographical and other errors do not justify claim for damages.*

## SPECIFICATION

| | |
|---|---|
| **Cable Entries** | 3 |
| **Max Current (A)** | 32 |
| **Max Voltage (V)** | 250 |
| **Number of Poles** | 4 |
| **Max Conductor Size (Sq mm)** | 4 |
| **Minimum Cable Diameter (mm)** | 7 |
| **Maximum Cable Diameter (mm)** | 17 |
| **IP Rating** | 68 |
| **Min Temperature Rating °C** | -40 |
| **Max Temperature Rating °C** | 125 |
| **Temperature "T" Rating** | T85 |
| **Body Material** | PA66 / TPE |
| **Fixing System** | Cable |
| **Terminal Type** | Screw - end barrier contact |

## INDUSTRY ACCREDITATIONS