TeeTube

Range: Weatherproof/Waterproof Connectors

Order Code: THB.390.F2C.2

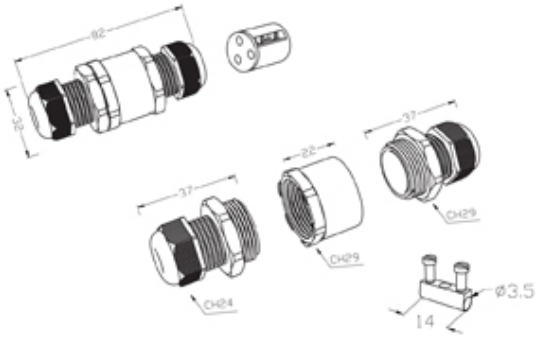

DESCRIPTION

TeeTube with innovative cable glands, 2 Pole Screw - wp 10.5mm to 14mm on one cable gland 7mm to 13.5mm on the other 2 glands, 2.5 mm max conducter size IP68 24A 450V 3 cable entries

WEATHERPROOF/WATERPROOF CONNECTORS FEATURES

- Tough, robust construction with large cable range acceptance
- Straight through, T splitter and Y splitter versions available
- Dual terminal versions available for easy fitting and looping of conductors (2+2 and 3+3 poles)
- Temperature rating of -40°C to +125°C

Features may vary by product throughout the range.

Subject to technical modification without notice.
Typographical and other errors do not justify claim for damages.

SPECIFICATION

Cable Entries	3
Max Current (A)	24
Max Voltage (V)	450
Number of Poles	2
Max Conductor Size (Sq mm)	2.5
Minimum Cable Diameter (mm)	10.5
Maximum Cable Diameter (mm)	14
IP Rating	68
Min Temperature Rating °C	-40
Max Temperature Rating °C	125
Temperature "T" Rating	T125
Body Material	PA66 / TPE
Fixing System	Cable
Terminal Type	Screw - wp

INDUSTRY ACCREDITATIONS