TeePlug & Sockets

Range: Weatherproof/Waterproof Connectors

Order Code: THR.388.S6A

Product Image
Not Available

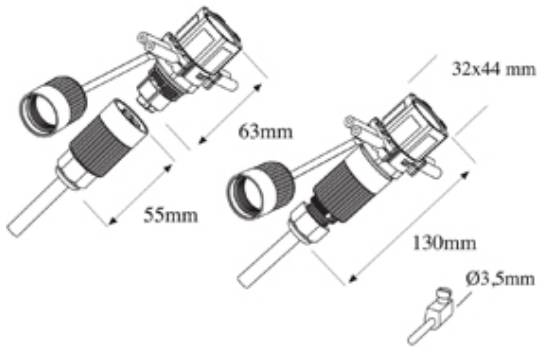

DESCRIPTION

TeePlug 6 pole Screw terminal to cable diameter, 4 mm max conductor size IP20 17.5A 400V 1 cable entry, retail pack

WEATHERPROOF/WATERPROOF CONNECTORS FEATURES

- Up to IP68 versions available
- Various configurations available
- Components are keyway coded to ensure correct assembly
- All products are quick and simple to install
- Bulkhead/chassis mount options available (depending on product type)
- Temperature range of -20°C to +125°C

Features may vary by product throughout the range.

Subject to technical modification without notice.
Typographical and other errors do not justify claim for damages.

SPECIFICATION

Type	Plug
Cable Entries	1
Max Current (A)	17.5
Max Voltage (V)	400
Number of Poles	6
Max Conductor Size (Sq mm)	4
IP Rating	20
Min Temperature Rating °C	-40
Max Temperature Rating °C	125
Temperature "T" Rating	T85
Body Material	PA66
Fixing System	Cable
Terminal Type	Screw

INDUSTRY ACCREDITATIONS