# TeeBox

## Range: Weatherproof/Waterproof Connectors

**Order Code: THH.622.L3A**

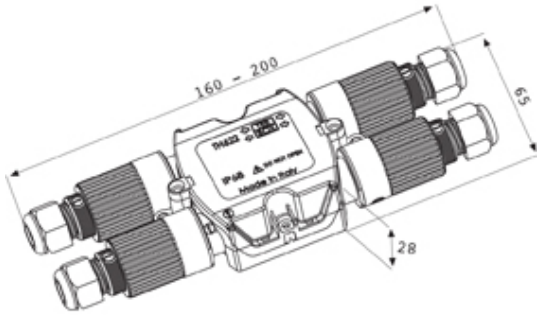


### DESCRIPTION

TeeBox 12mm cable max IP66-68 rated Screw fixing 4 cable entries, 3 poles contact screw terminals

### WEATHERPROOF/WATERPROOF CONNECTORS FEATURES

- Comprehensive range of connection options
- Protection rating up to IP68 depending on product
- Unique 3 pole T connector TH029 available for use in TH209 & TH211 range, no cable forming required
- TH211 available as full KIT version complete with TH029 fitted
- Power distribution products available in 3 port (TH630) and 4 port (TH62) versions
- Temperature range of -20°C to +125°C

*Features may vary by product throughout the range.*

*Subject to technical modification without notice.*
*Typographical and other errors do not justify claim for damages.*

## SPECIFICATION

| | |
|---|---|
| **Cable Entries** | 4 |
| **Max Current (A)** | 10 |
| **Max Voltage (V)** | 400 |
| **Number of Poles** | 3 |
| **Max Conductor Size (Sq mm)** | 4 |
| **Maximum Cable Diameter (mm)** | 12 |
| **IP Rating** | 66-68 |
| **Min Temperature Rating °C** | -40 |
| **Max Temperature Rating °C** | 125 |
| **Temperature "T" Rating** | T125 |
| **Body Material** | PA66 |
| **Fixing System** | Screw |
| **Terminal Type** | Screw |

## INDUSTRY ACCREDITATIONS