Standard PCB Terminal Blocks

Range: PCB Terminal Blocks, Connectors and Fuse Holders

Order Code: AST0270404

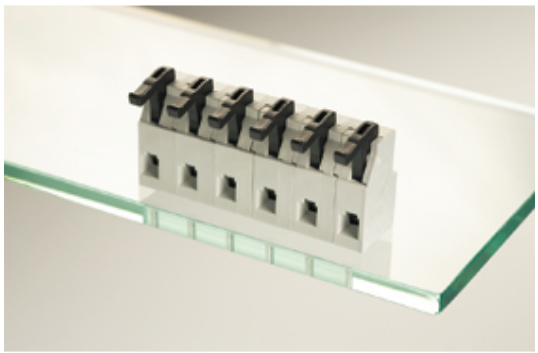

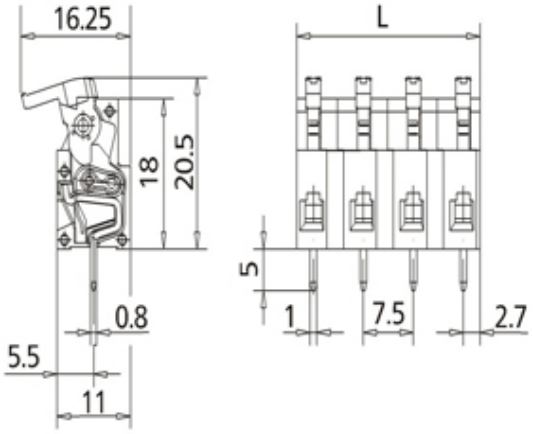

DESCRIPTION

4 Pole horizontal spring PCB terminal block 7.5mm pitch 12A 400V

Subject to technical modification without notice.
Typographical and other errors do not justify claim for damages.

SPECIFICATION

Type	Spring - Screwless
Connection Method	Lever / Tool Less
Mounting Type	Wave - through hole
Orientation	Horizontal
Join	End stackable
Pitch (mm)	7.5
Number of Poles	4
Min Wire Size (Sq mm)	0.08
Max Wire Size (Sq mm)	1
Max Current (A)	12
Max Voltage (V)	400
Height (mm)	20.5
Standard Colour	Grey
Width (mm)	16.25
Length (mm)	27.5
Solder Pin Length (mm)	5
PCB Hole Diameter (mm)	1.4
Comments	Pole sizes / no of ways not shown, please contact us for availability
IP Rating	20
Min Temperature Rating °C	14
Min Wire Size AWG	28
Pin Style	Solderable
Tracking Resistance CTI (v)	400

INDUSTRY ACCREDITATIONS