Inserts/Accessories

Range: Cable Glands/Grommets

Order Code: 311 G

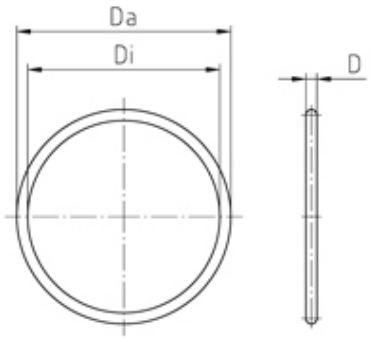

DESCRIPTION

O-Ring, PG11 16X2MM

Subject to technical modification without notice.
Typographical and other errors do not justify claim for damages.

SPECIFICATION

Product Type	Standard
Min Temperature Rating °C	-30
Max Temperature Rating °C	100
Thread Size	PG11
External Diameter (mm)	20
Interior Diameter (mm)	15
Diameter (mm)	2
Comments	assembled o-ring enables higher protection grades
Additional Material Detail	Nitrile rubber