Nylon PG Cable Glands

Range: Cable Glands/Grommets

Order Code: 50.042 PA7035

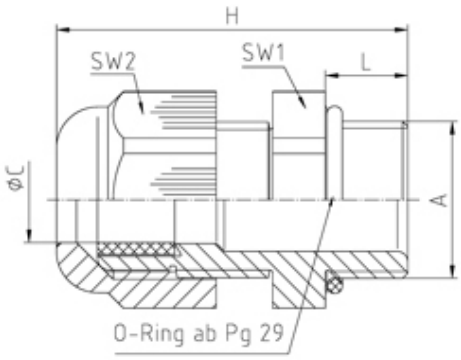

DESCRIPTION

Perfect cable gland PA7035 PG42 thread length 13, min/max cable dia 30-38

CABLE GLANDS/GROMMETS FEATURES

- PG Nylon
- Easy to install
- 50.0xx range offers protection against twisting and also offers integrated anchorage
- Temperature rating -20°C to +100°C

Subject to technical modification without notice.
Typographical and other errors do not justify claim for damages.

SPECIFICATION

Product Type	Standard
Sealing Ring Material	Polychloroprene-Nitrile rubber CR/NBR
Body Material	Polyamide
Min Temperature Rating °C	-20
Max Temperature Rating °C	100
IP Rating	68
Colour	Light Grey - RAL 7035
Thread Size	PG42
Clamping Range Min (mm)	30
Clamping Range Max (mm)	38
External Connecting Thread Type	PG
Thread Length (mm)	13
Comments	details about test standards see annex
Width Across Flat 1 (mm)	60
Width Across Flat 2 (mm)	60
Height (mm)	65
Connecting Thread Size	Pg 42
Additional Material Detail	Body - Polyamide PA6 V-2
Standards	UL514B
Test Standard	UL 514B

INDUSTRY ACCREDITATIONS