Nickel Plated Brass PG Cable Glands

Range: Cable Glands/Grommets

Order Code: 121316

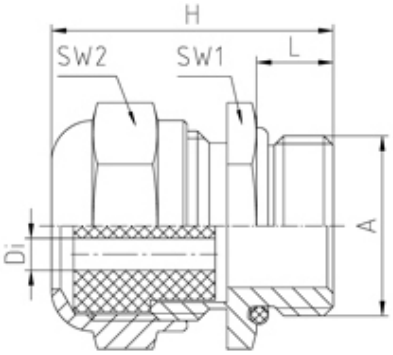

DESCRIPTION

Wadi cable gland with multi hole insert PG21 thread length 6 sealing insert material Evoprene TPE

Subject to technical modification without notice.
Typographical and other errors do not justify claim for damages.

SPECIFICATION

Product Type	Standard
Body Material	Nickel Plated Brass
Min Temperature Rating °C	-30
Max Temperature Rating °C	100
IP Rating	65
Thread Size	PG21
External Connecting Thread Type	PG
Thread Length (mm)	6
Sealing Insert	Evoprene TPE
Interior Diameter (mm)	2x5.2
Width Across Flat 1 (mm)	24
Width Across Flat 2 (mm)	24
Height (mm)	27
Connecting Thread Size	Pg 16
Additional Material Detail	Body - Brass CuZn39Pb3 nickel plated, O-Ring - Nitrile rubber