## TLPS-200RL(TLPS-300RL)

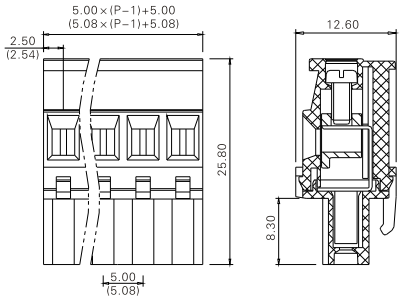


**技术数据 Technical data**

| | |
|---|---|
| Pitch (间距): | 5.00mm(5.08mm) |
| Approval (认证): | Applying |
| Rated voltage (电压): | 300V |
| Rated current (电流): | 12A |
| Wire range (线径): | 28-12AWG |
| Screw (螺丝): | M2.5 |

**料号 Part Number**

| 极数(Poles) | 型号(Model) |
|---|---|
| 02 | TLPS-200RL-02P(TLPS-300RL-02P) |
| : | : |
| 24 | TLPS-200RL-24P(TLPS-300RL-24P) |

## TLPSW-200RL(TLPSW-300RL)

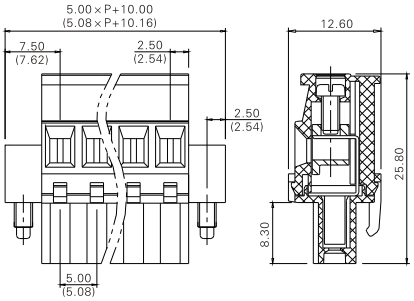


**技术数据 Technical data**

| | |
|---|---|
| Pitch (间距): | 5.00mm(5.08mm) |
| Approval (认证): | Applying |
| Rated voltage (电压): | 300V |
| Rated current (电流): | 12A |
| Wire range (线径): | 28-12AWG |
| Screw (螺丝): | M2.5 |

**料号 Part Number**

| 极数(Poles) | 型号(Model) |
|---|---|
| 02 | TLPSW-200RL-02P(TLPSW-300RL-02P) |
| : | : |
| 24 | TLPSW-200RL-24P(TLPSW-300RL-24P) |

## TLPS-301

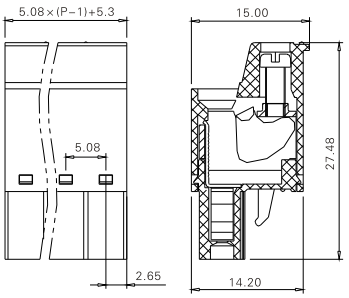


**技术数据 Technical data**

| | |
|---|---|
| Pitch (间距): | 5.08mm |
| Approval (认证): | Applying |
| Rated voltage (电压): | 300V |
| Rated current (电流): | 12A |
| Wire range (线径): | 28-12AWG |
| Screw (螺丝): | M2.5 |

**料号 Part Number**

| 极数(Poles) | 型号(Model) |
|---|---|
| 02 | TLPS-301-02P |
| : | : |
| 24 | TLPS-301-24P |

## TLPSW-301

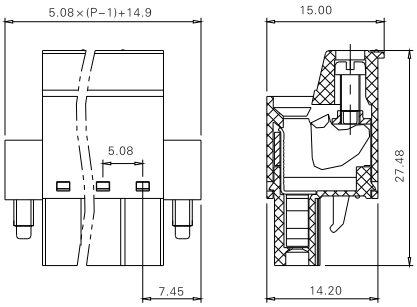


**技术数据 Technical data**

| | |
|---|---|
| Pitch (间距): | 5.08mm |
| Approval (认证): | Applying |
| Rated voltage (电压): | 300V |
| Rated current (电流): | 12A |
| Wire range (线径): | 28-12AWG |
| Screw (螺丝): | M2.5 |

**料号 Part Number**

| 极数(Poles) | 型号(Model) |
|---|---|
| 02 | TLPSW-301-02P |
| : | : |
| 24 | TLPSW-301-24P |

## TLPH-200V(TLPH-300V)

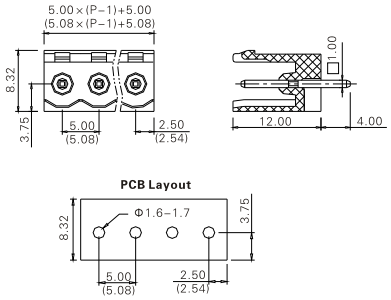


**技术数据 Technical data**

| | | |
|---|---|---|
| Pitch (间距): | 5.00mm(5.08mm) | |
| Approval (认证): | cULus | CE |
| Rated voltage (电压): | 300V | 250V |
| Rated current (电流): | 12A | 12A |
| PCB hole Dia(PCB直径): | Φ1.6-1.7mm | |

**料号 Part Number**

| 极数(Poles) | 型号(Model) |
|---|---|
| 02 | TLPH-200V-02P(TLPH-300V-02P) |
| : | : |
| 24 | TLPH-200V-24P(TLPH-300V-24P) |

## TLPH-400V(TLPH-500V)

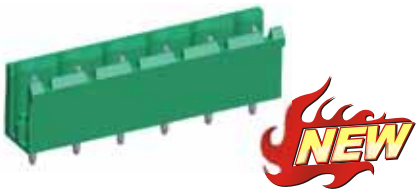


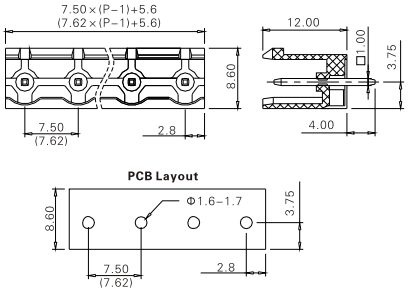


**技术数据 Technical data**

| | |
|---|---|
| Pitch (间距): | 7.50mm(7.62mm) |
| Approval (认证): | Applying |
| Rated voltage (电压): | 300V |
| Rated current (电流): | 12A |
| PCB hole Dia(PCB直径): | Φ1.6-1.7mm |

**料号 Part Number**

| 极数(Poles) | 型号(Model) |
|---|---|
| 02 | TLPH-400V-02P(TLPH-500V-02P) |
| : | : |
| 24 | TLPH-400V-24P(TLPH-500V-24P) |